DC13 091A. 368 kW (500 hp)

Fuel optimized

Note! Only available in the SLA market

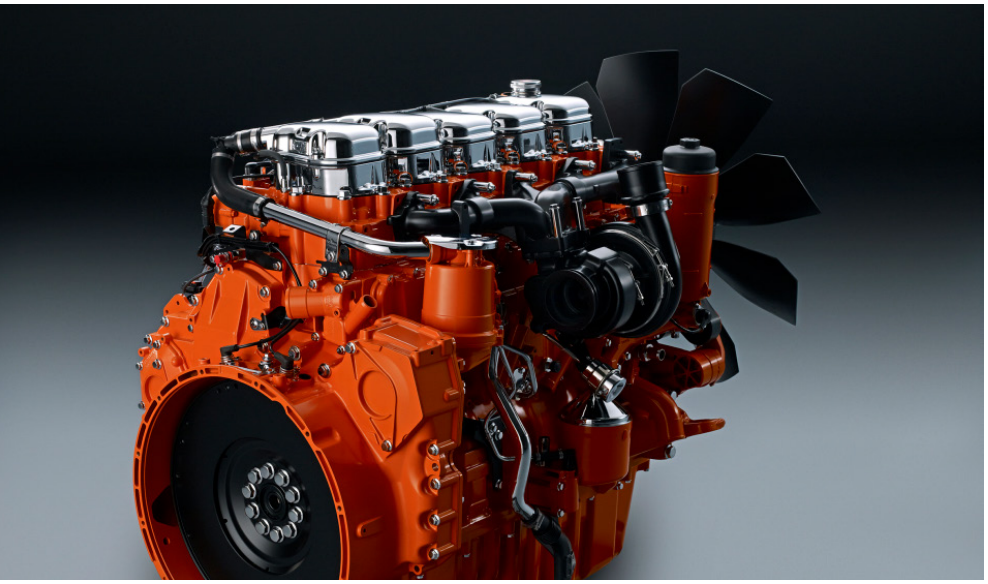

The industrial engines from Scania are based on a robust design with a strength optimized cylinder block containing wet cylinder liners, which can easily be exchanged. Individual cylinder heads with 4 valves per cylinder promote reparability and fuel economy.

The engine is equipped with a Scania developed Engine Management System, EMS, to ensure control of all aspects related to engine performance.
The injection system is based on electronically controlled unit injectors, which provide low exhaust emissions with good fuel economy and a high torque. The engine can be fitted with many options such as air cleaners, silencers, PTOs and flywheels, to suit a variety of installations.

	Rating	Engine speed (rpm)			
		1200	1500	1800	2100
Gross power (kW)	ICFN	289	361	368	368
Gross power (hp)	ICFN	393	491	500	500
Gross torque (Nm)	ICFN	2300	2298	1952	1673
Spec fuel consumption. Full load (g/kWh)		189	194	196	205
Spec fuel consumption. 3/4 load (g/kWh)		183	18	192	205
Spec fuel consumption. 1/2 load (g/kWh)		187	188	198	218
Heat rejection to coolant (kW)		106	118	119	126

ICFN – Continous service: Rated output available 1/1 h.
Unlimited h/year service time at a load factor of 100%

Standard equipment

- Scania Engine Management System, EMS
- Unit injectors, PDE
- Turbo charger
- Fuel filter and extra pre-filter with water separator
- Oil filter, full flow
- Centrifugal oil cleaner
- Oil cooler, integrated in block
- Oil filler, in valve cover
- Deep front oil sump
- Oil dipstick, in block
- Magnetic drain plug for oil draining
- Starter, 1-pole 6.0 kW
- Alternator, 1-pole 100A
- Flywheel, for use with friction clutch
- Silumin flywheel housing, SAE 1 flange
- Front mounted engine brackets
- Open crankcase ventilation
- Operator's manual

Optional equipment

- Cooling package
- Puller and pusher fans
- Fan ring with sealing
- Hydraulic pump
- Air compressor
- AC compressor
- Side-mounted PTO
- Front-mounted PTO
- Exhaust connections
- Engine heater
- Flywheels: SAE11.5", SAE14", DANA15/16", ZF WG260
- Stiff rubber engine suspension
- Air cleaner
- Closed crankcase ventilation
- Studs in flywheel housing
- External thermostat for extra oil cooler
- Low coolant level reaction
- Variable idle speed setting
- Low oil sump
- Oil level sensor

This specification may be revised without notice.

DC13 091A. 368 kW (500 hp)

Fuel optimized

Note! Only available in the SLA market

Engine description

No of cylinders	6 in-line
Working principle	4-stroke
Firing order	1 - 5 - 3 - 6 - 2 - 4
Displacement	12.7 litres
Bore x stroke	130 x 160 mm
Compression ratio	18:1
Weight	1050 kg (excl oil and coolant)
Piston speed at 1500 rpm	8.0 m/s
Piston speed at 1800 rpm	9.6 m/s
Camshaft	High position alloy steel
Pistons	Steel pistons
Connection rods	I-section press forgings of alloy steel
Crankshaft	Alloy steel with hardened and polished bearing surfaces
Oil capacity	34-45 dm³
Electrical system	1-pole 24V

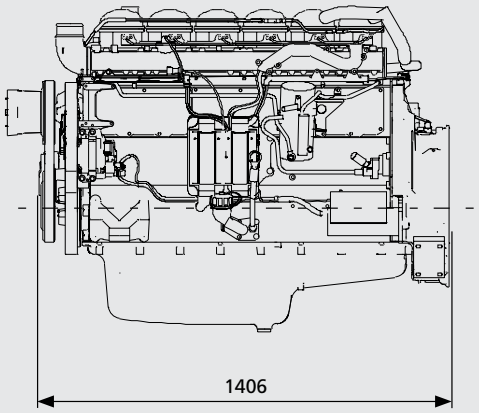

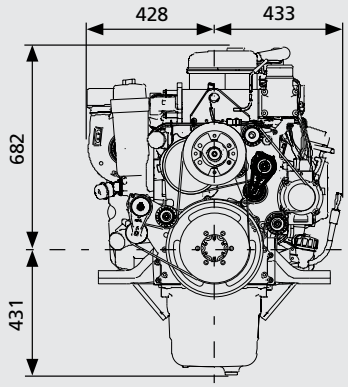

All dimensions in mm

Output

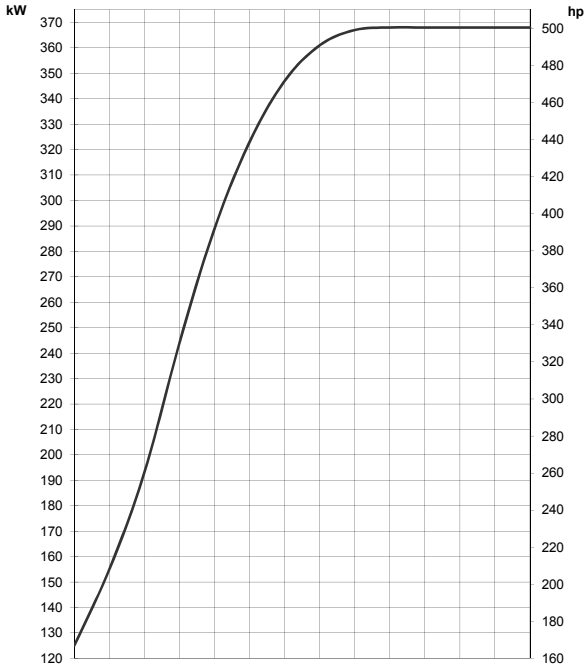

Torque

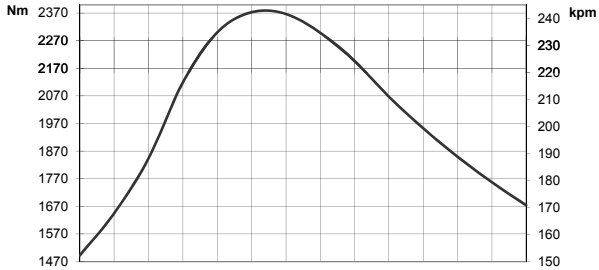

Spec fuel consumption

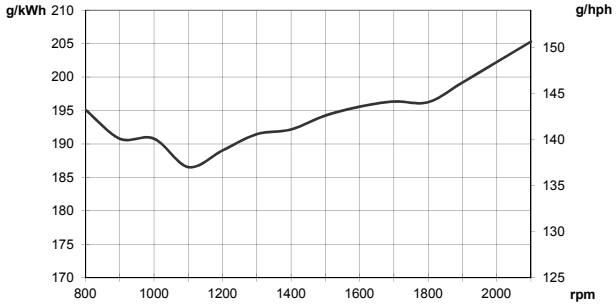

Test conditions Air temperature +25°C. Barometric pressure 100 kPa (750 mmHg). Humidity 30 %. Diesel fuel acc. to ECE R 24 Annex 6. Density of fuel 0.840 kg/dm³. Viscosity of fuel 3.0 cSt at 40°C. Energy value 42700 kJ/kg.
Power test code ISO 3046. Power and fuel values +/-3%.

SCANIA

SE 151 87 Södertälje, Sweden
Telephone +46 8 553 810 00
Telefax +46 8 553 829 93
www.scania.com
engines@scania.com

Edition 02 © Scania CV AB, SE-151 87 Södertälje, Sweden